DISCLAIMER: EB Display Co., Inc. will not be responsible for damage or injury resulting from the improper installation of this display. Please follow the installation instructions and use the hardware provided.	REVISION:	DATE:	JOB NUMBER: 24129

ITEM NO.	PART NUMBER	PART NAME	QTY
1	PIP-24129-MA01	GLASS EYEWEAR DISPENSER WELDMENT	1
2	PIP-24129-H01	HARDWARE PACK	1

HARDWARE PACK			
ITEM NO.	PART NUMBER	PART NAME	QTY
1	PURCHASE	SELF DRILLING SCREW ANCHOR FOR DRYWALL #6-#10 SCREW X 1-1/4"L MIN (MCM# 66615A25)	2
2	PURCHASE	#10 x 1.5" PHIL. TRUSS HD SHEET METAL SCREW	2
3	PURCHASE	POLYBAG (SIZE PER CONTENTS)	1
4	PURCHASE	DRYWALL #6 X 1.50"L	1

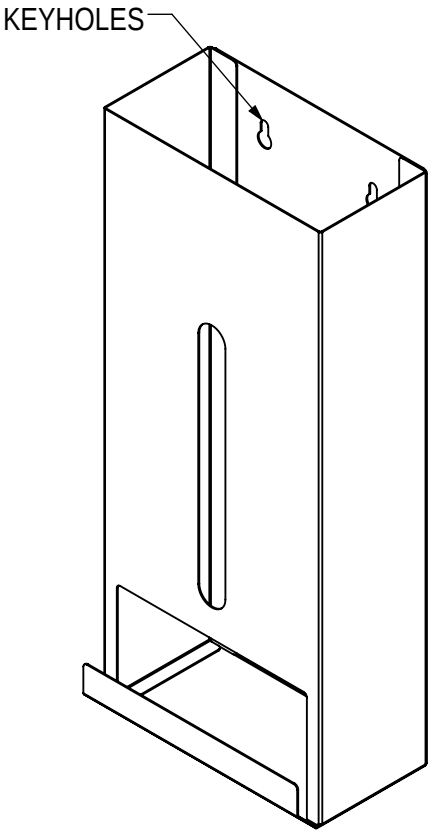

FIGURE A

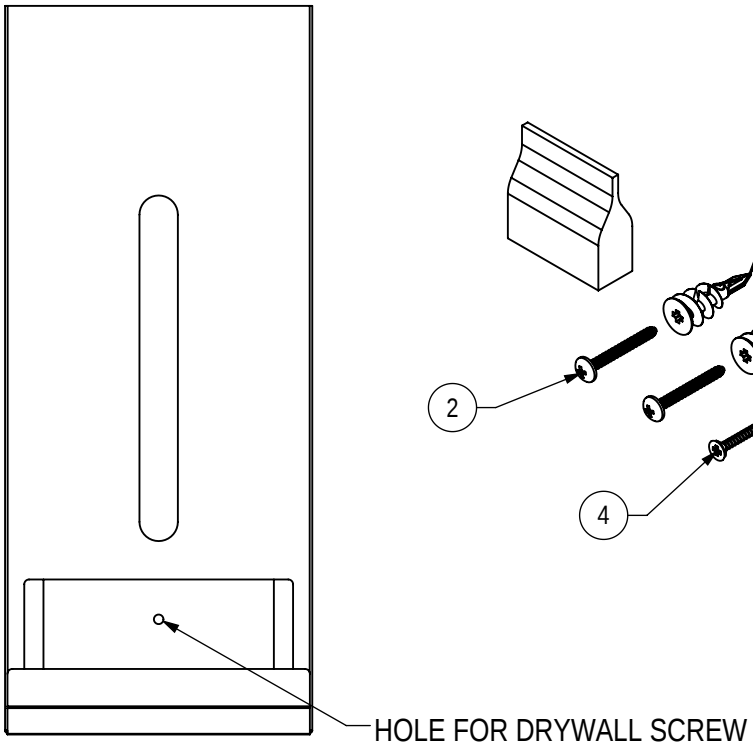

FIGURE B

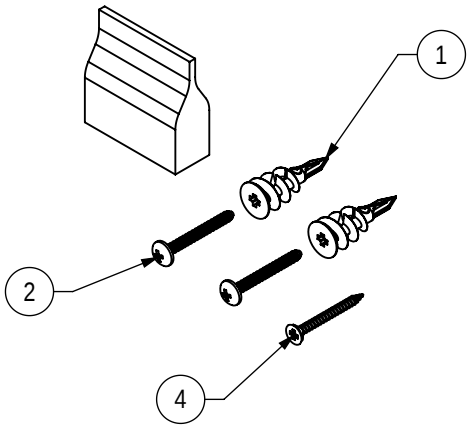

1. USING THE TEMPLATE ON THE BACK OF THIS INSTRUCTION SHEET, MARK THE TWO ANCHOR LOCATIONS ON THE WALL IN THE DESIRED POSITION.

2. HOLD THE DISPENSER UP TO THE MARKS YOU JUST MADE AND MAKE SURE THAT THE MARKS ARE CENTERED IN THE KEYHOLE SLOTS ON THE DISPENSER, THEN USING A DRILL, SCREW THE SELF DRILLING ANCHORS INTO THE WALL UNTIL THEY ARE FLUSH. INSTALL THE MACHINE SCREWS INTO THE ANCHORS LEAVING THEM ABOUT 2 TURNS OUT FROM SNUG OR APPROXIMATELY 3/32".

3. HANG THE DISPENSER ON THE SCREWS YOU INSTALLED IN STEP 2 AND PULL DOWN TO FULLY ENGAGE THE SCREW HEADS INTO THE TOP PORTION OF THE KEYHOLE.

4. TO LOCK THE DISPENSER IN PLACE, INSTALL THE DRYWALL SCREW INTO THE HOLE IN THE LOWER PORTION OF THE DISPENSER.

DISPLAY NAME:		CLIENT:	PAGE #:
GLASS EYEWEAR DISPENSER		PROTECTIVE INDUSTRIAL PRODUCTS INC	1 of 2

DISCLAIMER: EB Display Co., Inc. will not be responsible for damage or injury resulting from the improper installation of this display. Please follow the installation instructions and use the hardware provided.	REVISION:	DATE:	JOB NUMBER: 24129

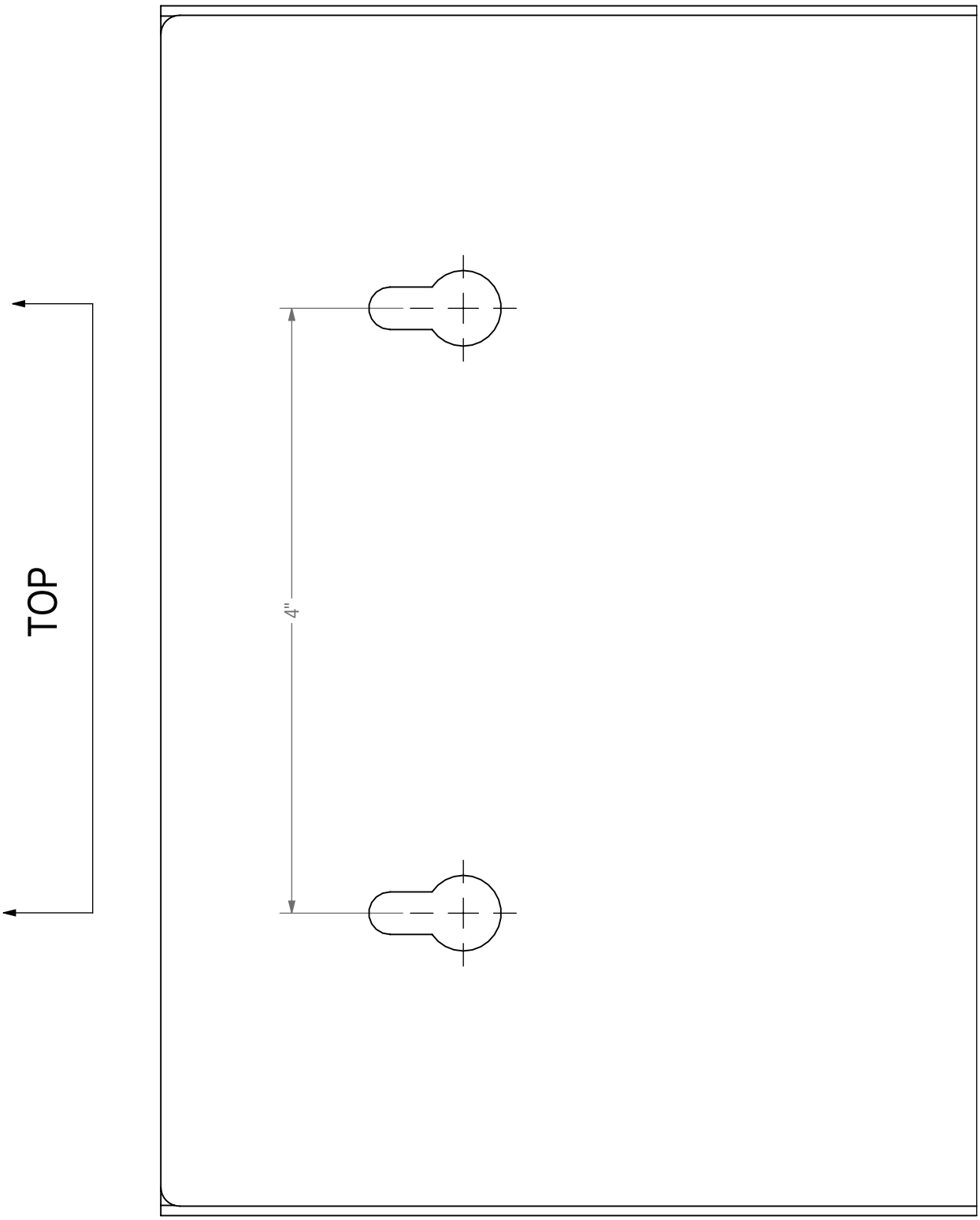

HOLE MARKING TEMPLATE

TIP: USING THE TIP OF A SMALL SCREWDRIVER OR A SMALL DRILL BIT, TRANSFER THE CENTERMARKS FROM THIS TEMPLATE TO THE WALL BEFORE INSTALLING WALL ANCHORS

DISPLAY NAME:		CLIENT:	PAGE #:
GLASS EYEWEAR DISPENSER		PROTECTIVE INDUSTRIAL PRODUCTS INC	2 of 2